ZG2AS Medium Intensity Obstruction Light(Type A&B)

Installation dimension（mm）

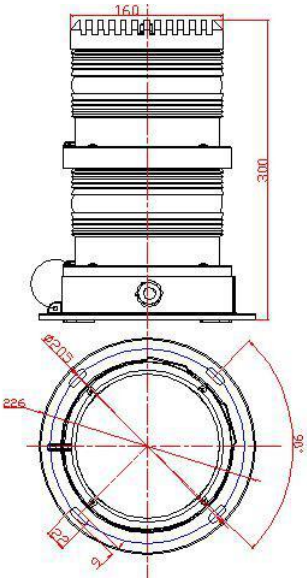

Description:

ZG2AS is a new generation medium intensity OB light. It comes with compact-size and light-weight, which makes installation more convenience. The optical part is based on Fresnel lens, a transformed convex lens which can concentrate light to a small specific angel to meet with ICAO requirements. Fresnel lens is often used to design obstruction light. The light's ingress protection level is IP67, assures the light is well sealed to withstand harsh environment include the ocean. If work with control box, more functions like synchronization could be realized. GPS or GPRS functions also available if required.

Widely used in various fields of the Air Force, civilian airports and obstacle free airspace, helipads, iron tower, chimney, ports, wind power plants, bridge and city high-rise buildings where require aviation warning.

Usually used above 45m and less than 150m buildings, could use alone, also could use with Medium OBL type B and Low intensity OBL type B together.

Major functions & features

- Based on Led Technologies.
- Customized for both AC or DC conditions.
- Multiple light elements in the source reduce the chances of a complete blackout which could be caused in case of a single source failure.
- All hardware of obstruction lights are made of corrosion resistant metals.
- Bird spikes for protection against droppings.
- Built in photocell, which can switch ON/OFF the lights automatically at dawn and dusk (optional).
- Use of quality components and sophisticated technology reduce chances of maintenance and replacement.
- Low power consumption, which leads to huge savings on electricity bills.
- LED light source ensures long lifetime, maintenance free.
- With GPS function, which can make several lights working at the same time（optional）
- With volt-free alarm contact, it will give an alarm in case of light failure.
- Built-in lightning/surge protection(can withstand strike 7.5KV/5times, Imax 15KV).
- Resistant to shock and vibration.
- No RF Radiations, EMC Compliant.
- Reversed Polarity Protected(DC Type).
- Corrosion resistant lamp & housing-suitable for off-shore use.
- Self-contained compartment-eliminates additional box.

Applications:

- High rise building marking
- Telecom tower marking
- Road obstruction marking
- Navigation aid
- Port, dock entrance&walkway
- Buoy marking
- Offshore gas&oil platform

Shanghai Lansing Electronics Co., Ltd Tel：+86 021-59185617 Fax: +86 021-59185617 Web：www.lansinglight.com E-mail：sales@lansinglight.com
Add: No 609, Tahui Rd, Shihudang Town, Songjiang Dist Shanghai, China, 201612
All rights reserved by Lansing, without the written authorization of the Lansing, any part thereof shall not be reproduced or transmitted in any form.

ZG2AS Medium Intensity Obstruction Light(Type A&B)

Specifications:

LIGHT OUT-PUT	
Peak Intensity	(Night,Red) 2000cd (±25%),(Daytime)20,000cd (±25%)
Vertical Divergence	-1° :950cd, Centering at 0.5°
Horizontal out-put	360 Degree
LED Color	White in the daytime and red at night
LED Lifespan	100,000 Hours
OPERATION	
Flash Pattern	Flashing(20-60 times/min available)
POWER SUPPLY	
Input voltage	110VAC ~ 220VAC, 24VDC, 48VDC
Frequency	50Hz ~ 60Hz
Power consumption	30W
MECHANICAL STRUCTURE	
Lens	Polycarbonate, UV Stabilize
Body	Die-casting Aluminum
Water-proof	IP67
Net Weight:	8KG
Temperature Range	-40℃ ~ +55℃
Relative humidity	100% with condensation
Overall size(mm)	160mm×300mm×226mm
Lightning protection lever	10KA
Wind load	80m/s

Compliant with

- ICAO Standard: ICAO medium intensity type A Annex 14, 4th Edition, July 2004
- FAA Standard: FAA L865,AC No. 150/5345-43F,2006

Advantages:

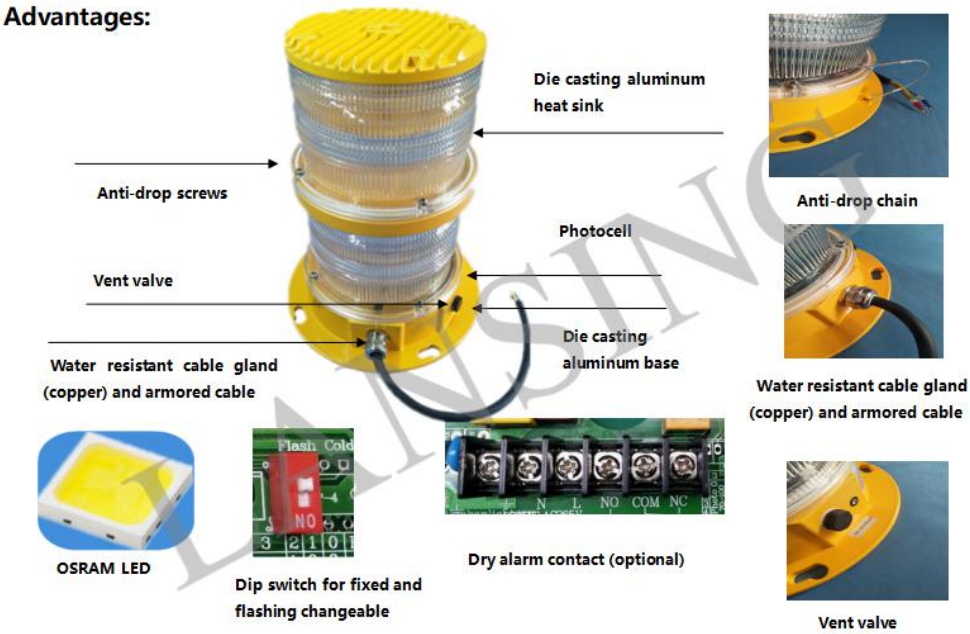

Shanghai Lansing Electronics Co., Ltd Tel: +86 021-59185617 Fax: +86 021-59185617 Web: www.lansinglight.com E-mail: sales@lansinglight.com
Add: No 609, Tahui Rd, Shihudang Town, Songjiang Dist Shanghai, China, 201612
All rights reserved by Lansing, without the written authorization of the Lansing, any part thereof shall not be reproduced or transmitted in any form.

Installation and operation

- Secure the light on a smooth surface which has enough strength, if there is no mounting surface, we can customize special mounting bracket as request.
- When installation, please stay away the nearby light source, at the same time, ensure the photocell do not cover by the near object.
- Make sure the power supply can match the rated power of light before connecting.
- Unfasten three buckles on the base and overturn the lamp body, the terminals appear.
- Insert the power cable from the cable gland and then connect them to the corresponding terminals inside the lamp body.
- After finishing the connection, fasten the buckles.
- Check whether the power cables are connected correctly before power on.

Mounting dimension (unit: mm)

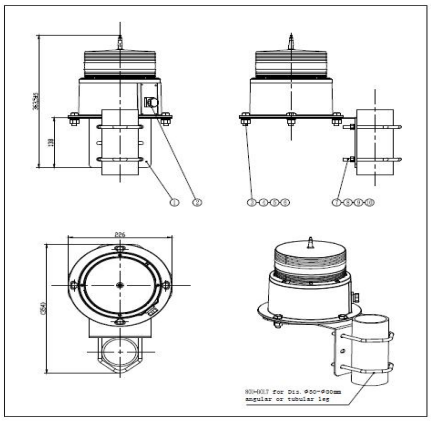

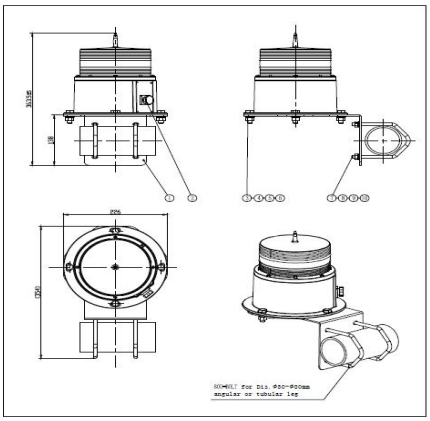

Caution:

- The power supply is AC220, can’ t use other powers, otherwise it will damage the lights.
- The obstruction light needs to be installed below lightning conductor or lightning protection zone, in case light be struck by lightning.
- It’ s normal if temperature rise while operating.
- Please do not open any part of lights while operating.
- The light is fully sealed, please do not install or dismantle unless you are professional. Once operated inappropriately, our company will not guarantee the warranty.

Notice

- Ensure that the power connection part is correct before using.
- Temperature rise when light working is normal phenomenon.
- Please do not open any components inside by yourself.
- This product is a sealed structure; Please do not be tampered with by anyone other than registered installer. Once found, we are not warranty.

Shanghai Lansing Electronics Co., Ltd Tel: +86 021-59185617 Fax: +86 021-59185617 Web: www.lansinglight.com E-mail: sales@lansinglight.com
Add: No 609, Tahui Rd, Shihudang Town, Songjiang Dist Shanghai, China, 201612
All rights reserved by Lansing, without the written authorization of the Lansing, any part thereof shall not be reproduced or transmitted in any form.